SECTION 11110

LAUNDRY WASHER-EXTRACTOR, 60 LB. (27.2 KG) CAPACITY, WITH SELF-CONTAINED WATER SAVING SYSTEM

PART 1 GENERAL

1.01 SECTION INCLUDES:

A. Automatic laundry washer-extractor for processing water-washed linen items with self-contained water reclamation system capable of reclaiming water from no less than (2) rinse steps

1.02 SYSTEM DESCRIPTION

A. DESIGN REQUIREMENTS:

1.	Construction:	304 or equal stainless steel cylinder, tub & cover panels
2.	Input voltage:	208-240/60/3 3 wire plus ground
3.	Dry weight capacity:	60 lb. (27.2 kg)
4.	Wash cylinder volume:	9.3 cu ft (263346 cu cm) minimum
5.	Overall width:	41-7/16 inches (1053 mm) nominal
6.	Overall height:	91 inches (2311 mm) nominal
7.	Overall depth:	61-3/4 inches (1568 mm) nominal
8.	Number & size of water supply inlet valves	2 at 1/2 inch (13 mm), 2 at 3/4 inch (19 mm), all with 3/4NH (19 mm) male connections
9.	Number & size of drain outlets:	1 at 3 inch (76 mm)
10.	Overflow:	Internally plumbed
11.	Control system:	Programmable microprocessor
12.	Cylinder drive:	Direct drive V belt system without brakes, gearboxes or clutches
13.	Drive motor:	5 hp

B. PERFORMANCE REQUIREMENTS:

1.	Number of selectable cylinder speeds:	7, including 1/2 wash speed for processing delicate items
2.	G-force at highest extract speed:	300 G's

3. Chemical supply system
   a. manually filled 5 compartment dry chemical dispensing system
   b. automatic flushing & connections for 5 external supply lines & control signals for 8 external supplies
4. Configured with integrated water reclamation system capable of reclaiming at least 25% of total water consumption
5. 3 independently controlled water levels
6. Spray rinse system

7. Control system
   a. Programmable microprocessor
   b. 39 cycle capacity
   c. Capable of precise temperature controlled fills
   d. Thermal cooldown
   e. Overnight soak
   f. Overflow flush
8. Drain valve automatically open in event of power failure

1.03 DELIVERY, STORAGE & HANDLING

A. ACCEPTANCE AT SITE:

1. Inspect machine for damage prior to acceptance. If damage is found, follow freight handler's procedure for claims.

B. STORAGE & PROTECTION

1. Machine should be stored in a site protected from weather, direct sunlight & temperature extremes. Do not remove packaging prior to storage.
2. If machine is to be stored for an extended period of time, consult manufacturer for special requirements.

1.04 SYSTEM STARTUP & COMMISSIONING

A. Machine installation should be inspected by local manufacturer's representative prior to startup & operation. The party installing the machine is responsible for setting the schedule for this inspection.

PART 2 PRODUCTS

A. Source quality

B. Alliance Laundry Systems LLC - UniMac, obtain commercial laundry equipment from a single manufacturer

1.01 QUALIFIED MODELS

A. UniMac model UW60PVQ with Water Saving System (no substitution)

PART 3 EXECUTION

1.01 INSTALLATION

A. Refer to & comply with manufacturer's installation instructions, document number F232084 with supplements F232122 & F800310. Do not deviate without permission from site owner, architect, general contractor & manufacturer's local representative.

ELECTRICAL REQUIREMENTS

VOLTAGE	Electric Heat	Full Load Amp	Circuit Breaker Amp	Wire Size	Sq. mm
200 - 240 / 50 - 60 / 3 / 3W	Without Heat	10	15	14	3 x 2.5
	Electric Heat	66	80	3	3 x 25
200 - 240 / 50 - 60 / 1 / 2W	Without Heat	14	25	10	2 x 6
	Electric Heat	N/A	N/A	N/A	N/A
380 - 415 / 50 - 60 / 3 / 3W	Without Heat	4	15	14	3 x 2.5
	Electric Heat	29	40	8	3 x 10
440 - 480 / 50 - 60 / 3 / 3W	Without Heat	4	15	14	3 x 2.5
	Electric Heat	33	40	8	3 x 10
NOTE: Electrically heated washers require two electrical services, one to supply washer and one to supply electrical heating system.					

Consult electrical code for local requirements. Standard electrical 3-phase model — 200 / 240 Volt, 60 Hz, 3 Phase three-wire plus ground with 120 Volt controls. Conforms to National Electrical Code, UL, Factory Mutual Systems, ANSI, and Canadian Standards*. Manufacturer recommends only three-phase circuit breakers for three-phase washers. **DO NOT USE FUSES.** Optional voltages available.

In view of company policy of continued improvement, the company reserves the right to change the specifications without notice.

* Certain models and/or voltages may not be approved by all approving agencies. Consult factory for approvals on exact models.

Model Dimensions

NOTE: Dimensions shown are for planning purposes only. Verify locational clearances before construction.

PLAN VIEW

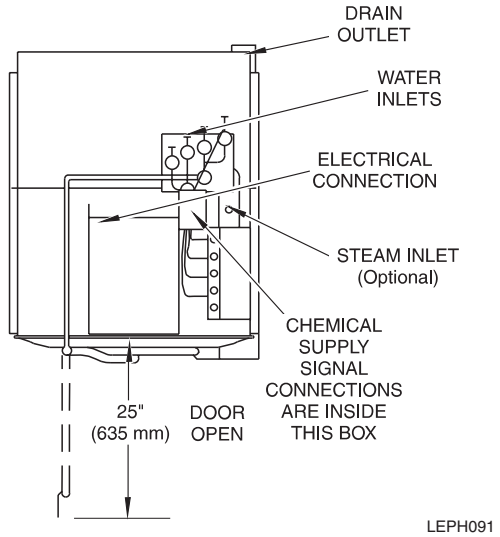

FRONT VIEW

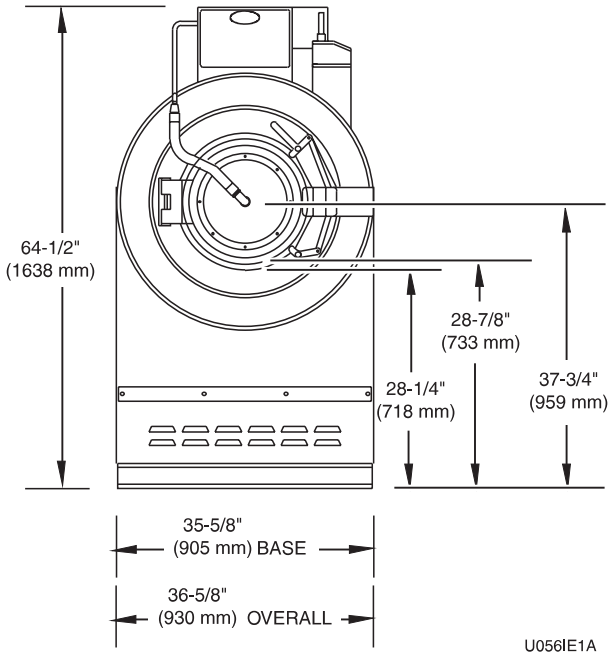

RIGHT SIDE VIEW

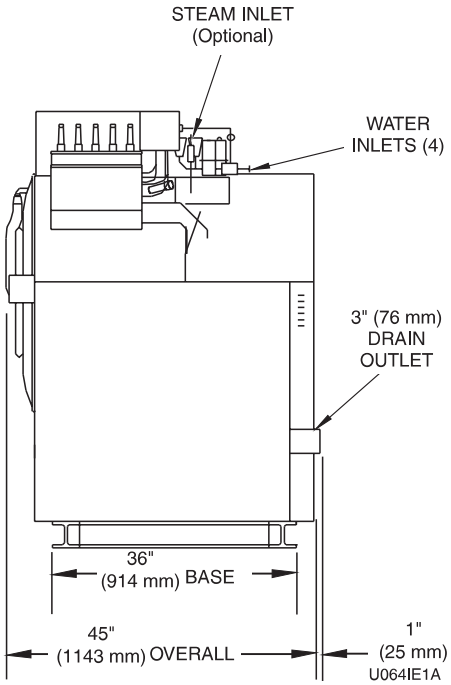

REAR VIEW

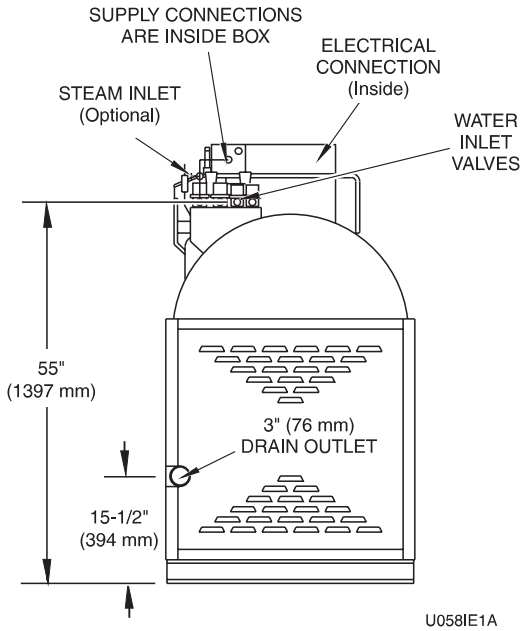

Model Installation and Foundation

IMPORTANT NOTICE: Machine must be installed on concrete floors minimum of 12" (305 mm) thick. Do not mount on wooden floors, above ground level or over basements. Installation must be “slab on grade” or equal. Do not isolate foundation from surrounding floor.

MOUNTING BOLT LAYOUT

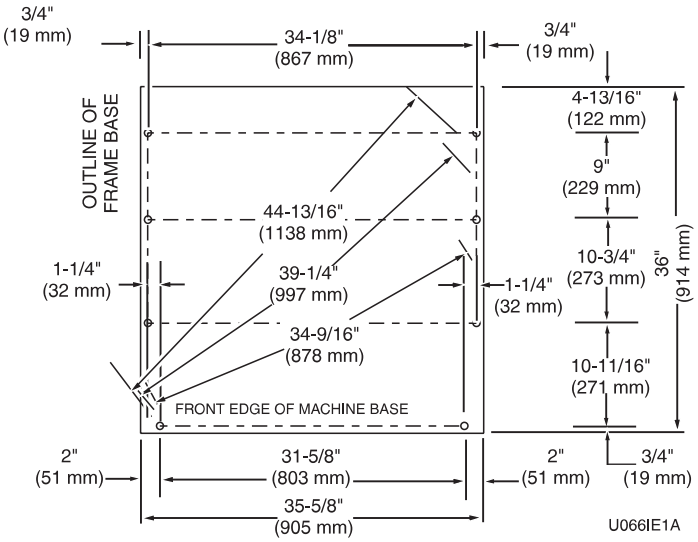

ALTERNATE METHOD OF MOUNTING

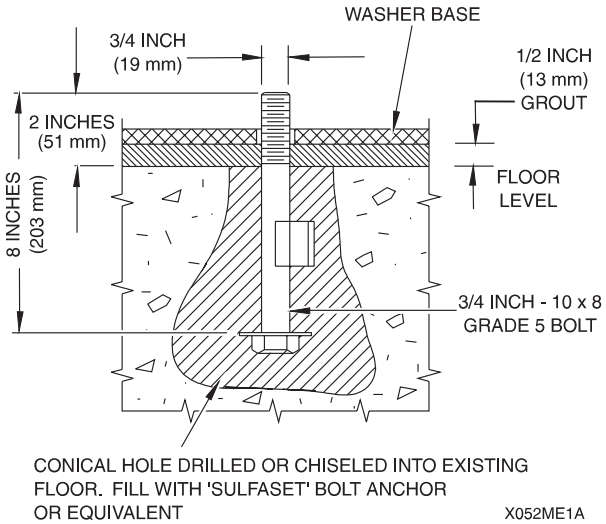

NOTE: Existing floor must be no less than 12 inches (305 mm) thick.

RIGHT SIDE VIEW

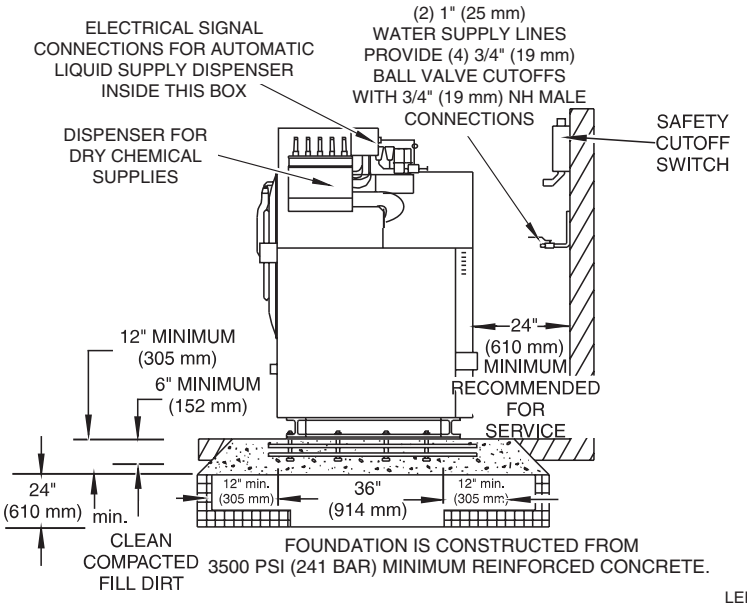
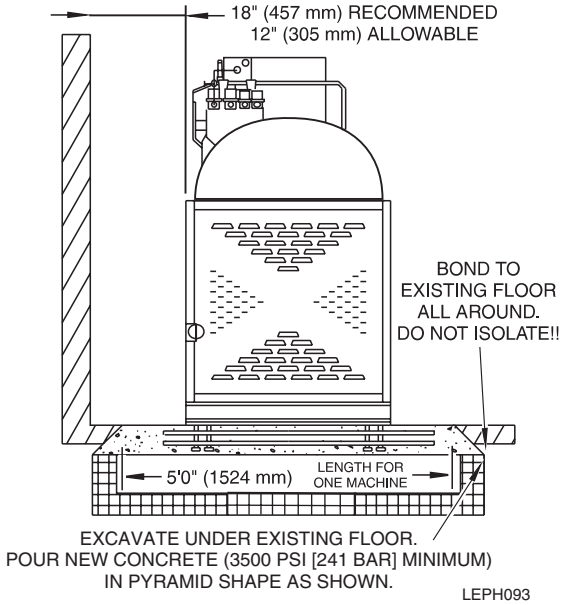
REAR VIEW